ALT – ALTERNATOR
ASR – AIR SHUT-OFF RELAY
AS1 – AIR SHUTOFF SOLENOID (RH)
AS2 – AIR SHUTOFF SOLENOID (LH)
AUX+ – AUXILLARY CONTACT +
BATT+ – BATTERY POWER +24V
BATT– – BATTERY POWER –24V
CB – CIRCUIT BREAKER
CDVR – CATERPILLAR DIGITAL VOLTAGE REGULATOR
CONN – CONNECTOR
CR2 – CONTROL RELAY 2 (SHORE POWER)
DIN RTN – DIGITAL INPUT RETURN
DI 2 – DISCRETE INPUT#2 (REMOTE INITIATE)
DO 2 – DISCRETE OUTPUT#2
DR SUP – DRIVER SUPPLY
EMCP 3.3 – ELECTRONIC MODULAR CONTROL PANEL 3.3
ENA – ENABLE
ESPB – EMERGENCY STOP PUSH BOTTON
ESV1 – ETHER START VALVE 1
ESV2 – ETHER START VALVE 2
EX DIS – EXITATION DISABLE
FAULT RESET
GEN – GENERATOR
MPU – MAGNETIC PICKUP
OPT – OPTIONAL
PLS – PANEL LIGHT SWITCH
PMG – PERMENANT MAGNET GENERATOR
PPR – PRELUBE PUMP RELAY
PPM – PRELUBE PUMP MOTOR
PS1 – PINION SOLENOID 1
PS2 – PINION SOLENOID 2
R01 (NO) – RELAY OUTPUT #1 NORMALLY OPEN (STARTER MOTOR RELAY)
R08 (NO) – RELAY OUTPUT #8 NORMALLY OPEN (PRELUBE)
RTD/THERMO – RTD/THERMO COUPLE MODULE
SHDWN – SHUT DOWN
ST+ – SHUNT TRIP+
SMMS1/SMMS2 – STARTER MOTOR MAG SWITCH
SM1 – STARTER MOTOR 1
SM2 – STARTER MOTOR 2
SMR – STARTER MOTOR RELAY
SP – SPEED POTENTIOMETER
STC – SHUNT TRIP COIL
STR – SHUNT TRIP RELAY
V– – ADD CONTACT VOLTAGE LOWER
V+ – ADD CONTACT VOLTAGE HIGHER
VAR/PF ENABLE – VAR/POWER FACTOR ENABLE
V COM – CONTACT SENSE COMMON

– RELAY COIL
– TERMINAL STRIP
– RELAY CONTACT NORMALLY OPEN
– MOTOR
– DIODE
– NORMALLY CLOSED CONTACT
– SWITCH CONTACT
– NORMALLY OPEN CONTACT
– EMERGENCY STOP PUSH BOTTON
– CIRCUIT BREAKER
– RELAY CONTACT NORMALLY CLOSED

1E0013Y	CONFIDENTIALITY
1E2733	DRAWING–AUTOCAD
1E0011	INTPR & TOL
MN GULAYETS	
LJ BOETTCHER	
EM MUSICK	
NONE	01 11JUN04
	C0108APR04
1 OF 5	

CATERPILLAR INC.

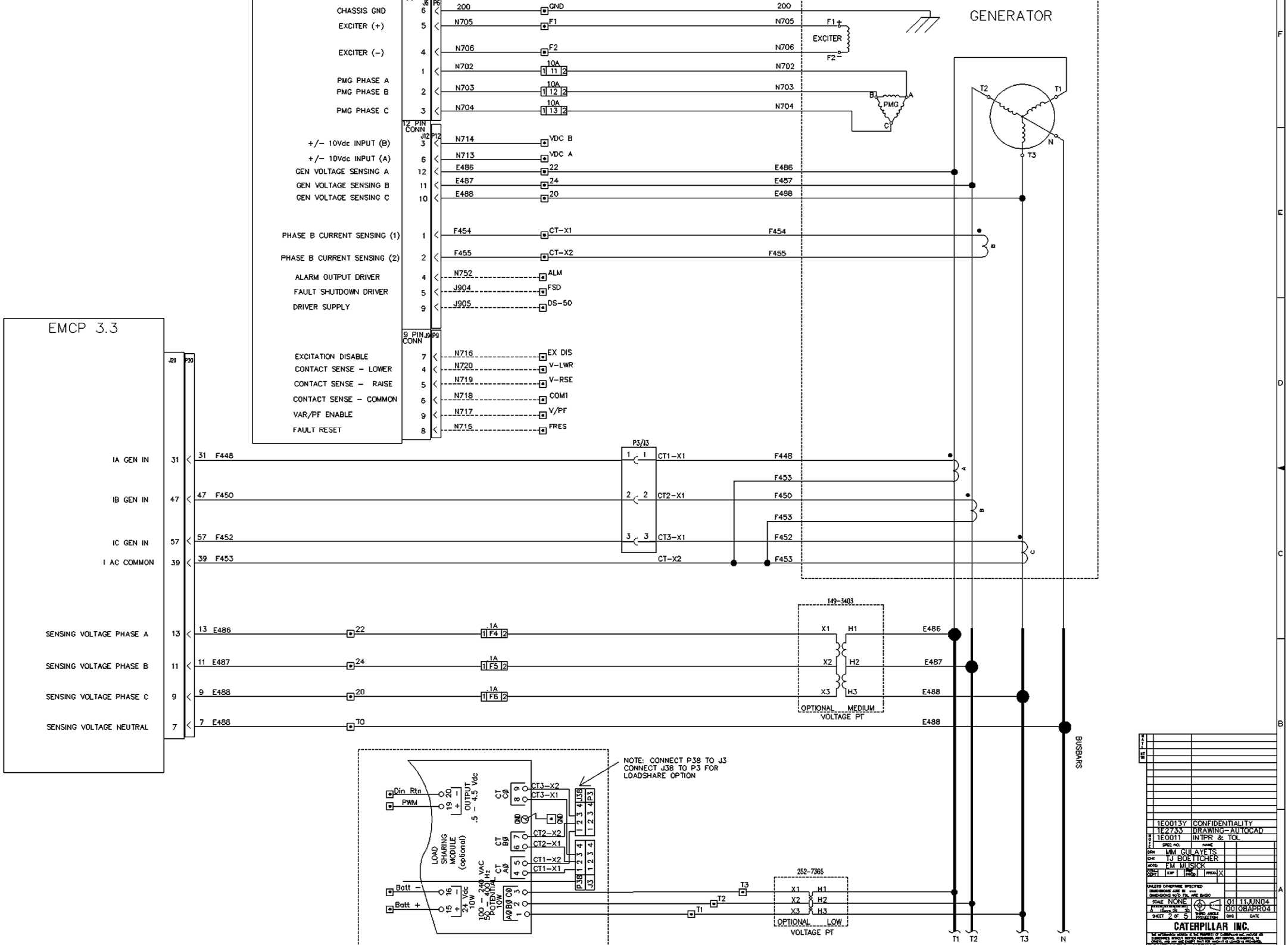
GENERATOR
EXCITER
PMG
BUSBARS
EMCP 3.3
J6 P6
CHASSIS GND 6 200 GND 200
EXCITER (+) 5 N705 F1 N705 F1+
EXCITER (−) 4 N706 F2 N706 F2−
PMG PHASE A 1 N702 10A 1 11 2 N702
PMG PHASE B 2 N703 10A 1 12 2 N703
PMG PHASE C 3 N704 10A 1 13 2 N704
12 PIN CONN J12 P12
+/− 10Vdc INPUT (B) 3 N714 VDC B
+/− 10Vdc INPUT (A) 6 N713 VDC A
GEN VOLTAGE SENSING A 12 E486 22 E486
GEN VOLTAGE SENSING B 11 E487 24 E487
GEN VOLTAGE SENSING C 10 E488 20 E488
PHASE B CURRENT SENSING (1) 1 F454 CT−X1 F454
PHASE B CURRENT SENSING (2) 2 F455 CT−X2 F455
ALARM OUTPUT DRIVER 4 N752 ALM
FAULT SHUTDOWN DRIVER 5 J904 FSD
DRIVER SUPPLY 9 J905 DS−50
9 PIN CONN J9 P9
EXCITATION DISABLE 7 N716 EX DIS
CONTACT SENSE − LOWER 4 N720 V−LWR
CONTACT SENSE − RAISE 5 N719 V−RSE
CONTACT SENSE − COMMON 6 N718 COM1
VAR/PF ENABLE 9 N717 V/PF
FAULT RESET 8 N715 FRES
J20 P20
IA GEN IN 31 31 F448 P3/J3 1 1 CT1−X1 F448
IB GEN IN 47 47 F450 2 2 CT2−X1 F450
IC GEN IN 57 57 F452 3 3 CT3−X1 F452
I AC COMMON 39 39 F453 CT−X2 F453
SENSING VOLTAGE PHASE A 13 13 E486 22 1A 1 F4 2 149−3403 X1 H1 E486
SENSING VOLTAGE PHASE B 11 11 E487 24 1A 1 F5 2 X2 H2 E487
SENSING VOLTAGE PHASE C 9 9 E488 20 1A 1 F6 2 X3 H3 E488
SENSING VOLTAGE NEUTRAL 7 7 E488 TO E488
OPTIONAL MEDIUM VOLTAGE PT
NOTE: CONNECT P38 TO J3
CONNECT J38 TO P3 FOR
LOADSHARE OPTION
Din Rtn
PWM
OUTPUT .5 − 4.5 Vdc
LOAD SHARING MODULE (optional)
CT C0 CT3−X2 CT3−X1
CT B0 CT2−X2 CT2−X1
CT A0 CT1−X2 CT1−X1
P38 J38 J3 P3
Batt −
Batt +
24 Vdc 10W
100 − 240 VAC 50 − 400 Hz POTENTIAL 10W
252−7365 X1 H1 X2 H2 X3 H3
OPTIONAL LOW VOLTAGE PT
T1 T2 T3 N
1E0013Y CONFIDENTIALITY
1E2733 DRAWING−AUTOCAD
1E0011 INTPR & TOL
DRN MM CULAYETS
CHK TJ BOETTCHER
APPD FM MUSICK
SCALE NONE
SHEET 2 OF 5
01 11JUN04
00 08APR04
CATERPILLAR INC.

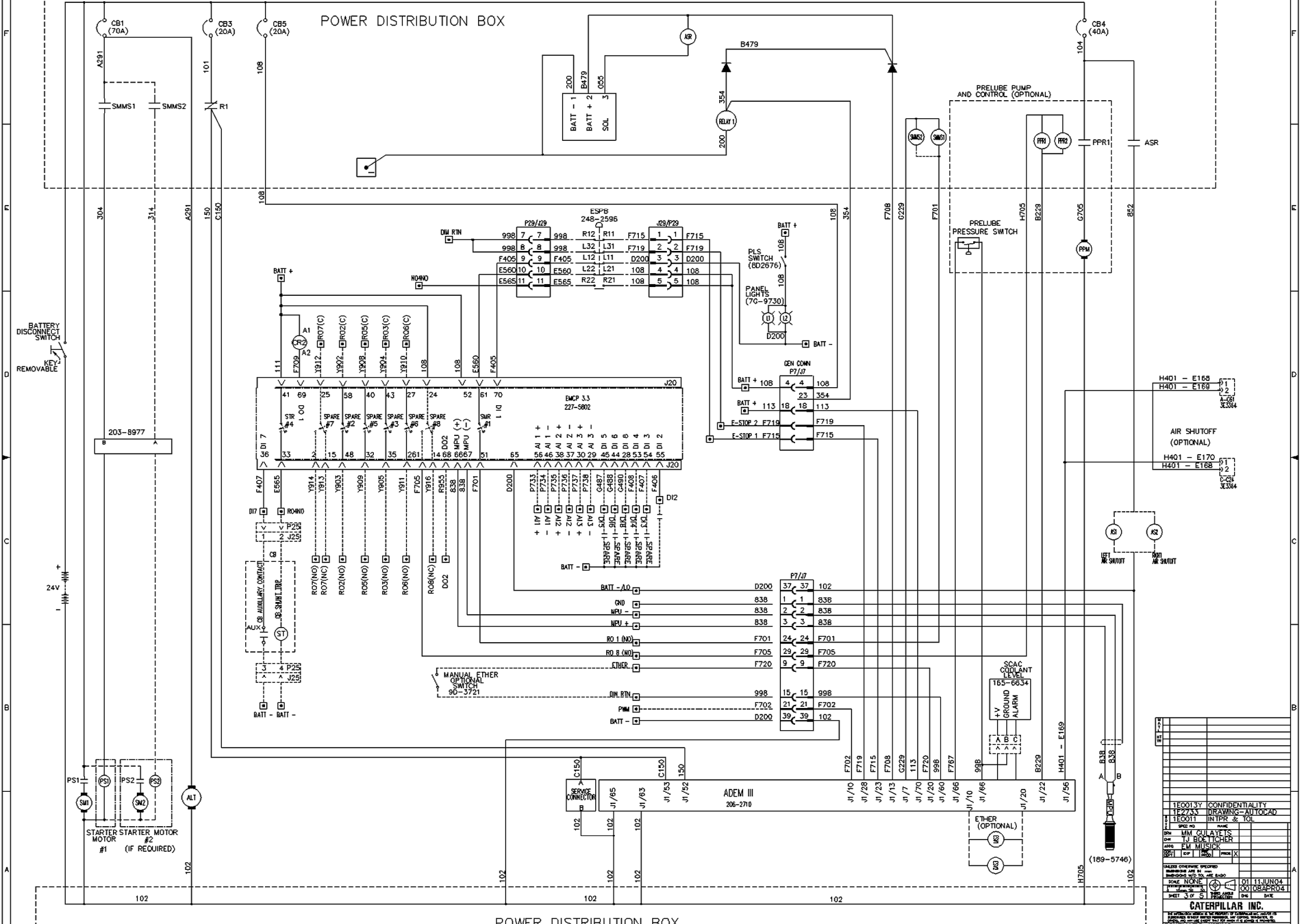
POWER DISTRIBUTION BOX
CB1 (70A)
CB3 (20A)
CB5 (20A)
CB4 (40A)
SMMS1
SMMS2
R1
ASR
B479
RELAY 1
BATT - 1
BATT + 2
SOL
PRELUBE PUMP AND CONTROL (OPTIONAL)
PPR1
PPR2
PRELUBE PRESSURE SWITCH
PPM
ESPB 248-2596
P29/J29
J29/P29
DIM RTN
NO4NO
PLS SWITCH (8D2676)
PANEL LIGHTS (7G-9730)
BATT +
BATT -
BATTERY DISCONNECT SWITCH
KEY REMOVABLE
203-8977
EMCP 3.3 227-5602
J20
GEN CONN P7/J7
E-STOP 2 F719
E-STOP 1 F715
H401 - E168
H401 - E169
H401 - E170
AIR SHUTOFF (OPTIONAL)
LEFT AIR SHUTOFF
RIGHT AIR SHUTOFF
24V
CB AUXILLARY CONTACT
CB SHUNT TRIP
AUX
ST
BATT - BATT -
BATT -/LO
GND
MPU -
MPU +
RO 1 (NO)
RO 8 (NO)
ETHER
PWM
MANUAL ETHER OPTIONAL SWITCH 90-3721
SCAC COOLANT LEVEL 165-6634
+V GROUND ALARM
PS1
PS2
SW1
SW2
STARTER MOTOR #1
STARTER MOTOR #2 (IF REQUIRED)
ALT
SERVICE CONNECTOR
ADEM III 206-2710
ETHER (OPTIONAL)
(189-5746)
1E0013Y CONFIDENTIALITY
1E2733 DRAWING-AUTOCAD
1E0011 INTPR & TOL
MM CULAYETS
TJ BOETTCHER
EM MUSICK
SCALE NONE
SHEET 3 OF 5
01 11JUN04
00 08APR04
CATERPILLAR INC.
POWER DISTRIBUTION BOX

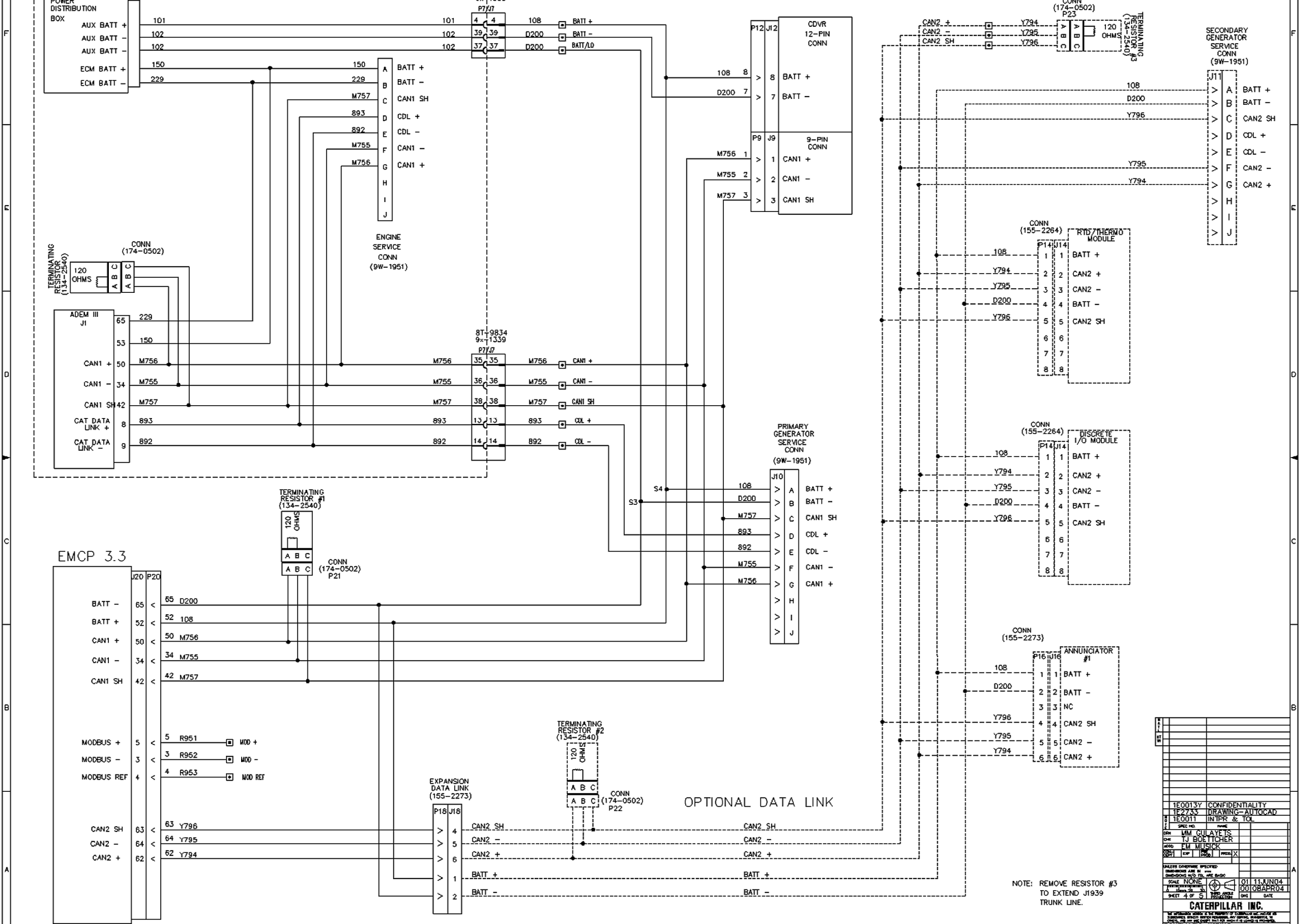
POWER DISTRIBUTION BOX
AUX BATT +
AUX BATT –
AUX BATT –
ECM BATT +
ECM BATT –
101
102
102
150
229
P7/J7
BATT +
BATT –
BATT/LO
D200
CDVR 12-PIN CONN
P12 J12
BATT +
BATT –
9-PIN CONN
P9 J9
CAN1 +
CAN1 –
CAN1 SH
M757
893
892
M755
M756
CDL +
CDL –
ENGINE SERVICE CONN (9W-1951)
TERMINATING RESISTOR (134-2540)
120 OHMS
CONN (174-0502)
ADEM III J1
CAT DATA LINK +
CAT DATA LINK –
8T-9834 9X-1339
PRIMARY GENERATOR SERVICE CONN (9W-1951)
J10
S4
S3
TERMINATING RESISTOR #1 (134-2540)
CONN (174-0502) P21
EMCP 3.3
J20 P20
BATT –
BATT +
CAN1 +
CAN1 –
CAN1 SH
MODBUS +
MODBUS –
MODBUS REF
R951
R952
R953
MOD +
MOD –
MOD REF
CAN2 SH
CAN2 –
CAN2 +
Y796
Y795
Y794
EXPANSION DATA LINK (155-2273)
P18 J18
TERMINATING RESISTOR #2 (134-2540)
CONN (174-0502) P22
OPTIONAL DATA LINK
CONN (174-0502) P23
TERMINATING RESISTOR #3 (134-2540)
SECONDARY GENERATOR SERVICE CONN (9W-1951)
J11
CONN (155-2264)
P14 J14
RTD/THERMO MODULE
DISCRETE I/O MODULE
CONN (155-2273)
P16 J16
ANNUNCIATOR #1
NC
NOTE: REMOVE RESISTOR #3 TO EXTEND J1939 TRUNK LINE.
1E0013Y CONFIDENTIALITY
1E2733 DRAWING-AUTOCAD
1E0011 INTPR & TOL
DRN MM CULAYETS
CHK TJ BOETTCHER
MGRD FM MUSICK
SCALE NONE
SHEET 4 OF 5
01 11JUN04
00 08APR04
CATERPILLAR INC.

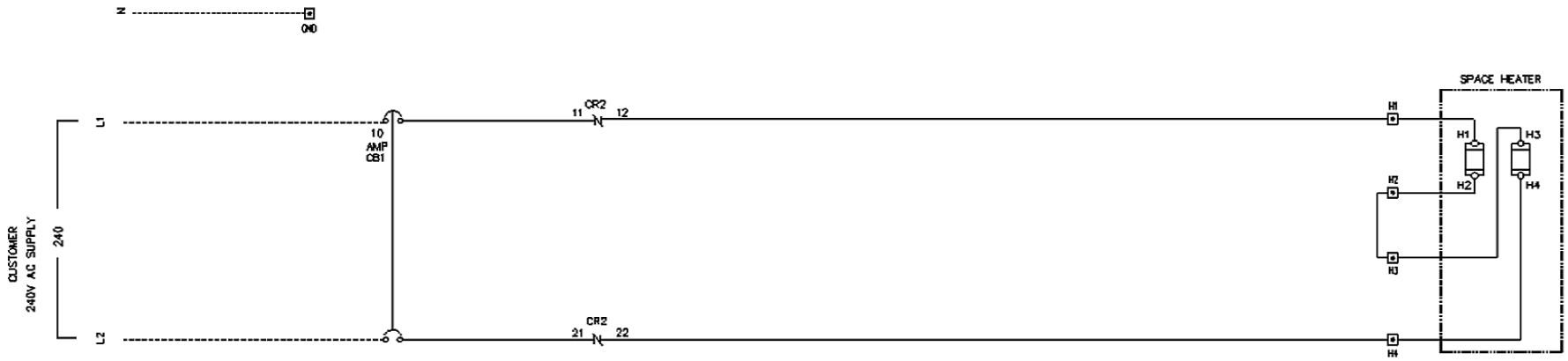

1E0013Y	CONFIDENTIALITY
1E2733	DRAWING-AUTOCAD
1E0011	INTPR & TOL
SPEC NO.	NAME
DR	MM GULAYETS
CHK	LJ BOETTCHER
APPR	EM MUSICK
NEXT	USE	INT	PROJ X
SCALE	NONE
	01 11JUN04
	00 08APR04
SHEET 5 OF 5	DWG NO.
	REV

CATERPILLAR INC.